NR805
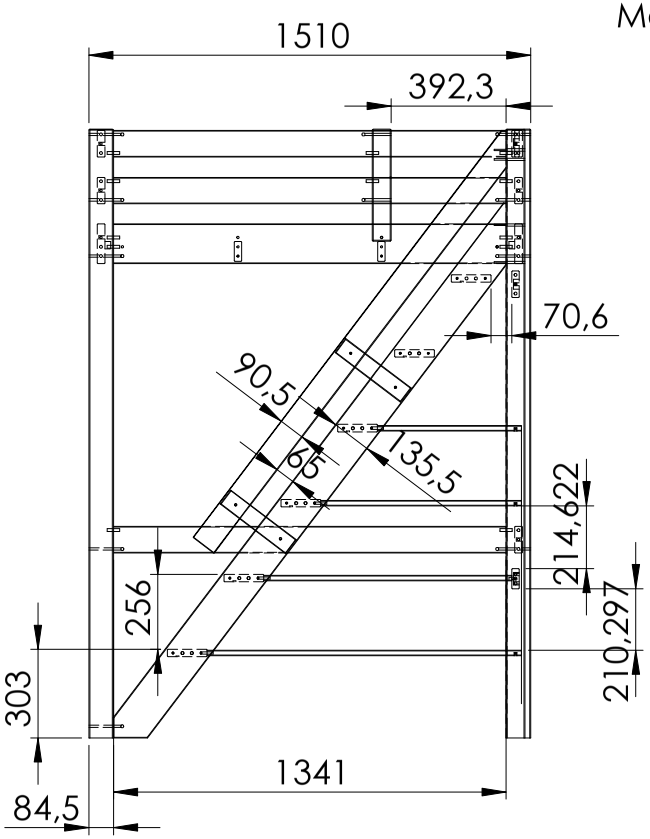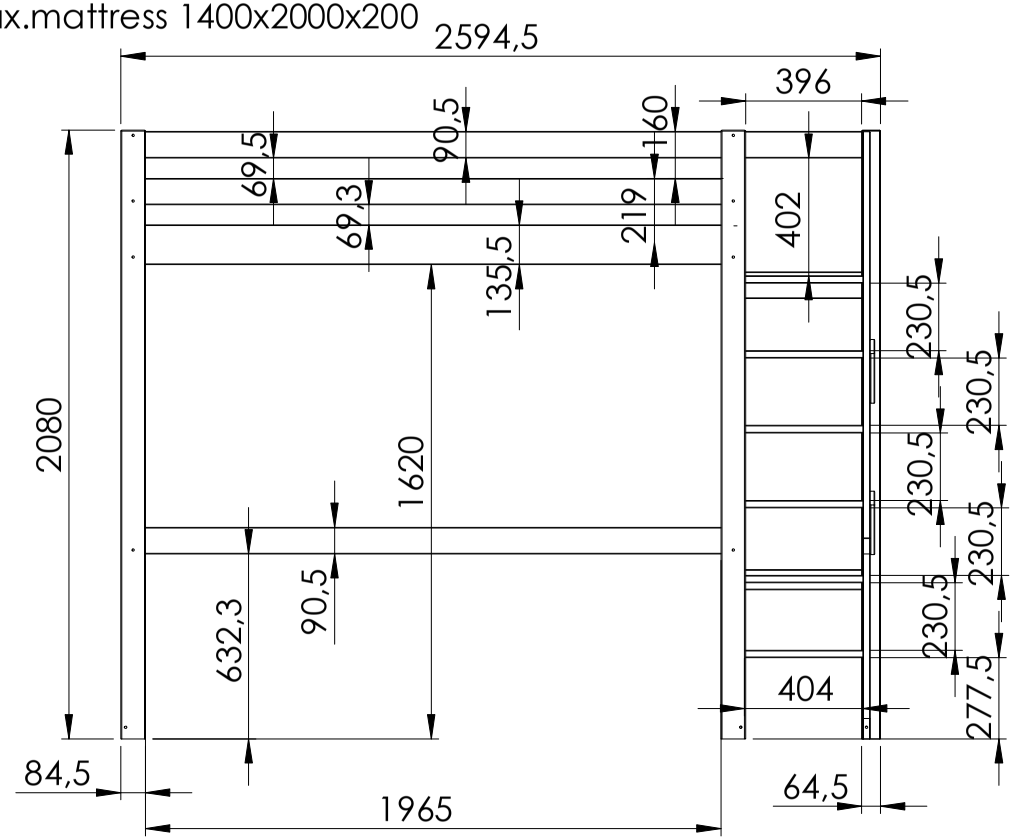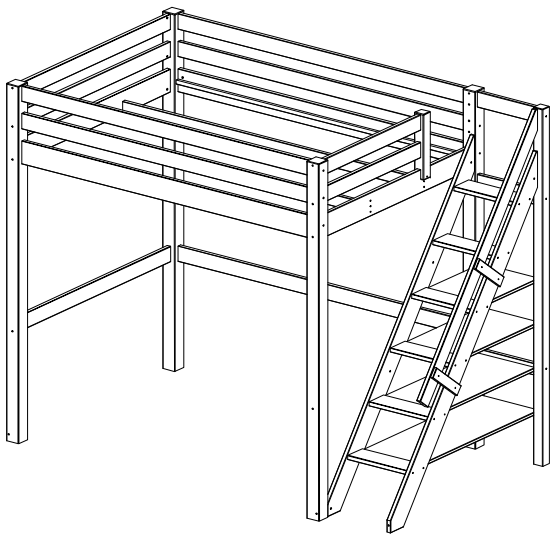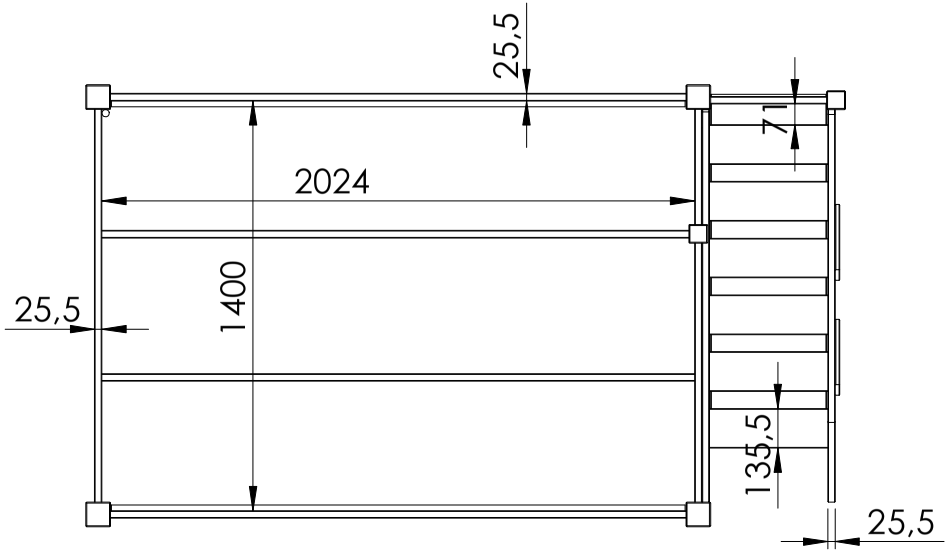
Max.mattress 1400x2000x200